CC BY

MOZILLA FACTORY
OPEN SOURCE FURNITURES

DESIGNED BY NOSIGNER
2013

MOZILLA FACTORY OPEN SOURCE FURNITURES

CC BY

MOZILLA FACTORY
OPEN SOURCE FURNITURES

DESIGNED BY NOSIGNER
2013

OA FLOOR

A:FLOORING

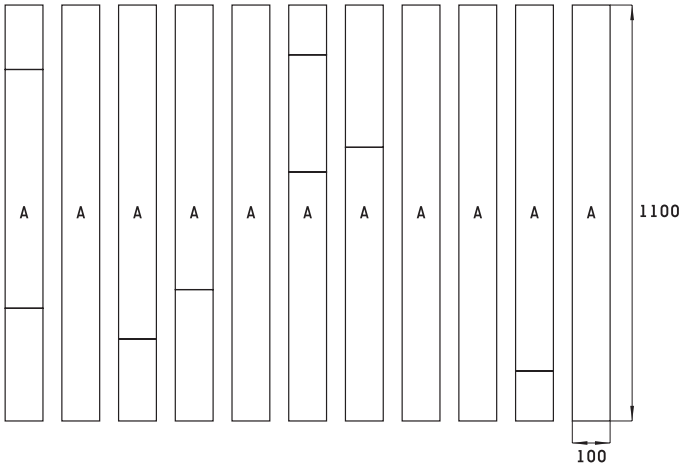

B:PLYWOOD

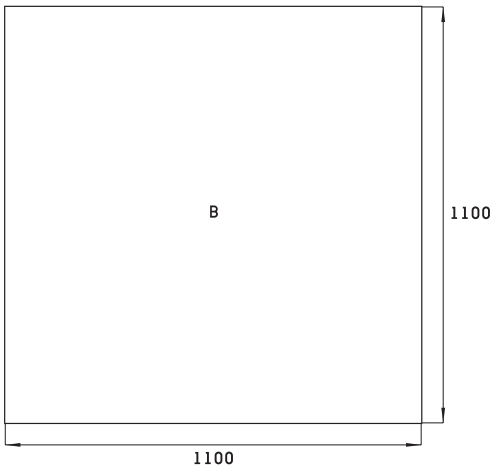

C:PLASTIC PALLET

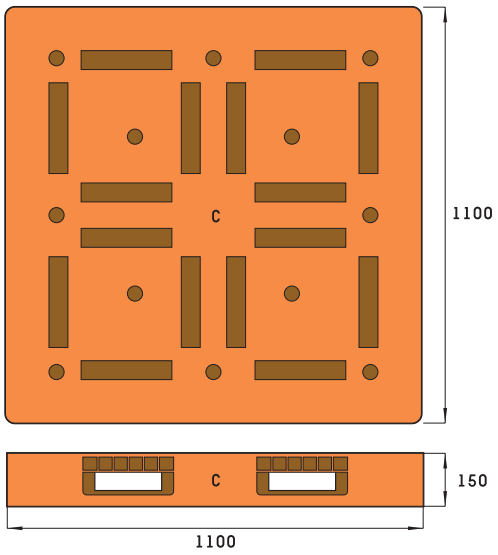

0A FLOOR

	MM	MM	MM	
A	100	1100	12	11
B	1100	1100	10	1

	MM	MM	MM	
C	1100	1100	150	1
MOZILLA MODULE				1
SCALE: 1/20				

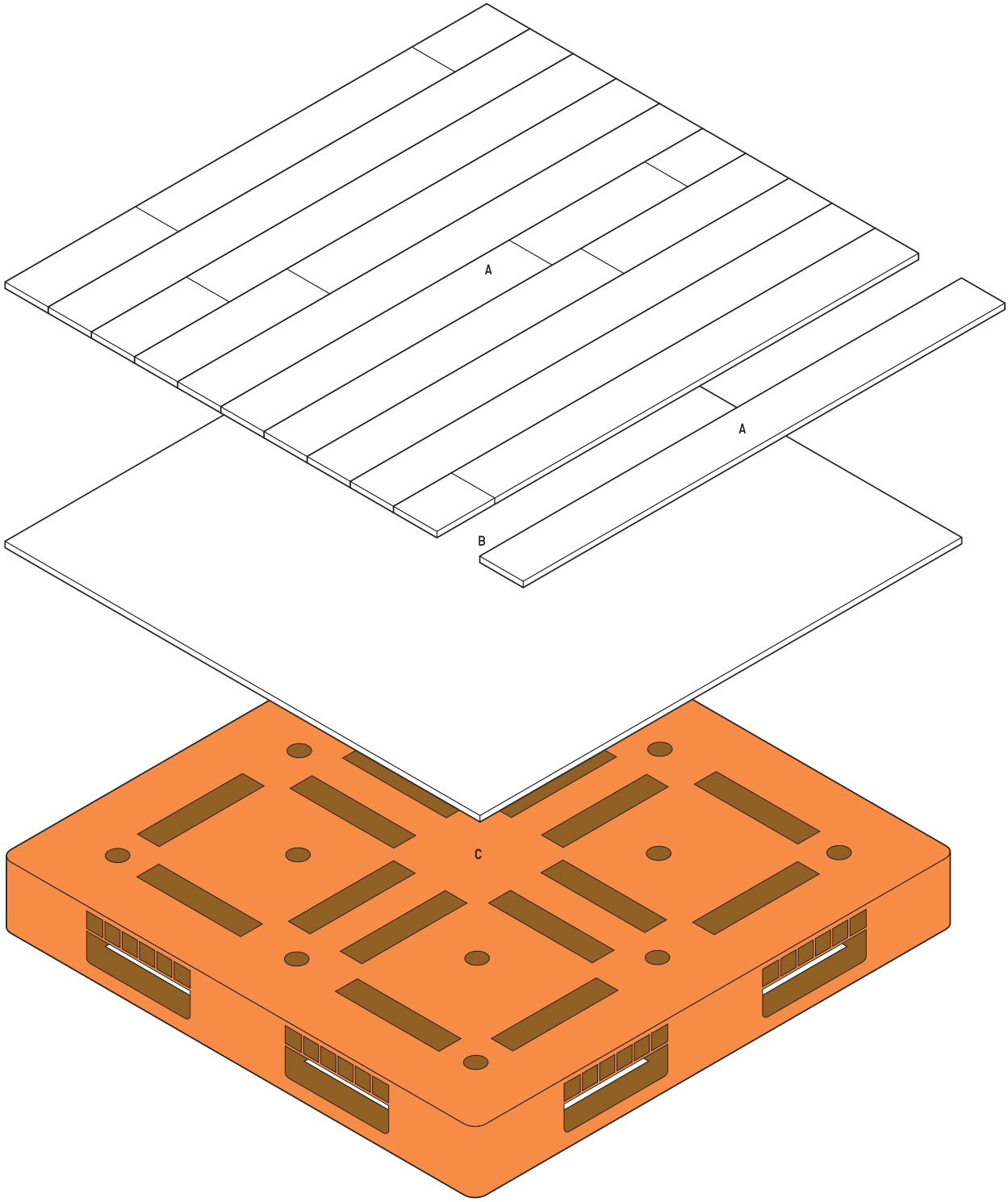

0A FLOOR

	MM	MM	MM	
A	100	1100	12	11
B	1100	1100	10	1

	MM	MM	MM	
C	1100	1100	150	1
MOZILLA MODULE				1

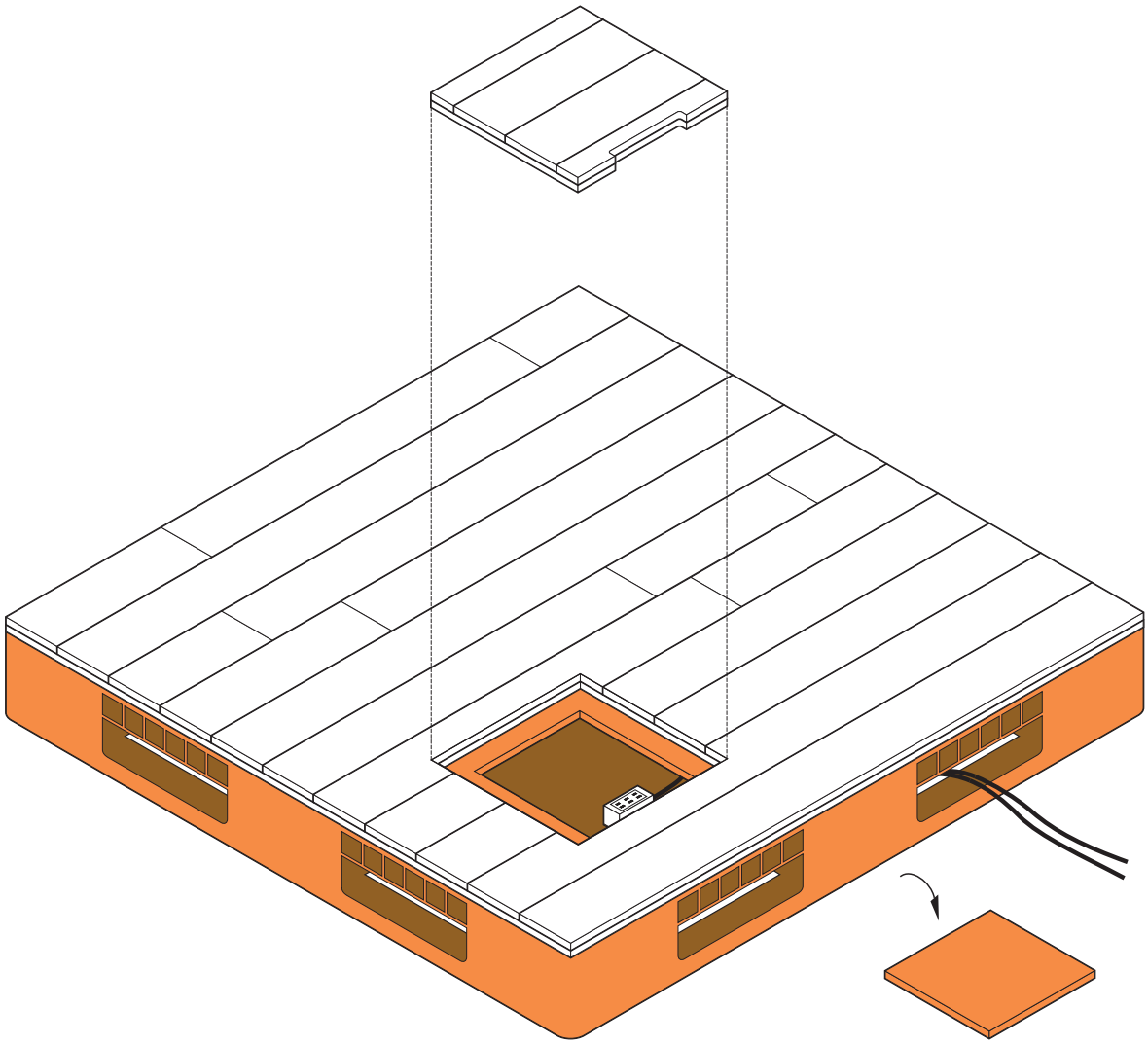

0A FLOOR

	MM	MM	MM	
A	100	1100	12	11
B	1100	1100	10	1

	MM	MM	MM	
C	1100	1100	150	1
MOZILLA MODULE				1

CC BY

MOZILLA FACTORY
OPEN SOURCE FURNITURES

DESIGNED BY NOSIGNER
2013

MATERIAL SYSTEM

MOZILLA FACTORY
OPEN SOURCE FURNITURES

DESIGNED BY NOSIGNER
2013

A:MULTI-WALL POLYCARBONATE SHEET

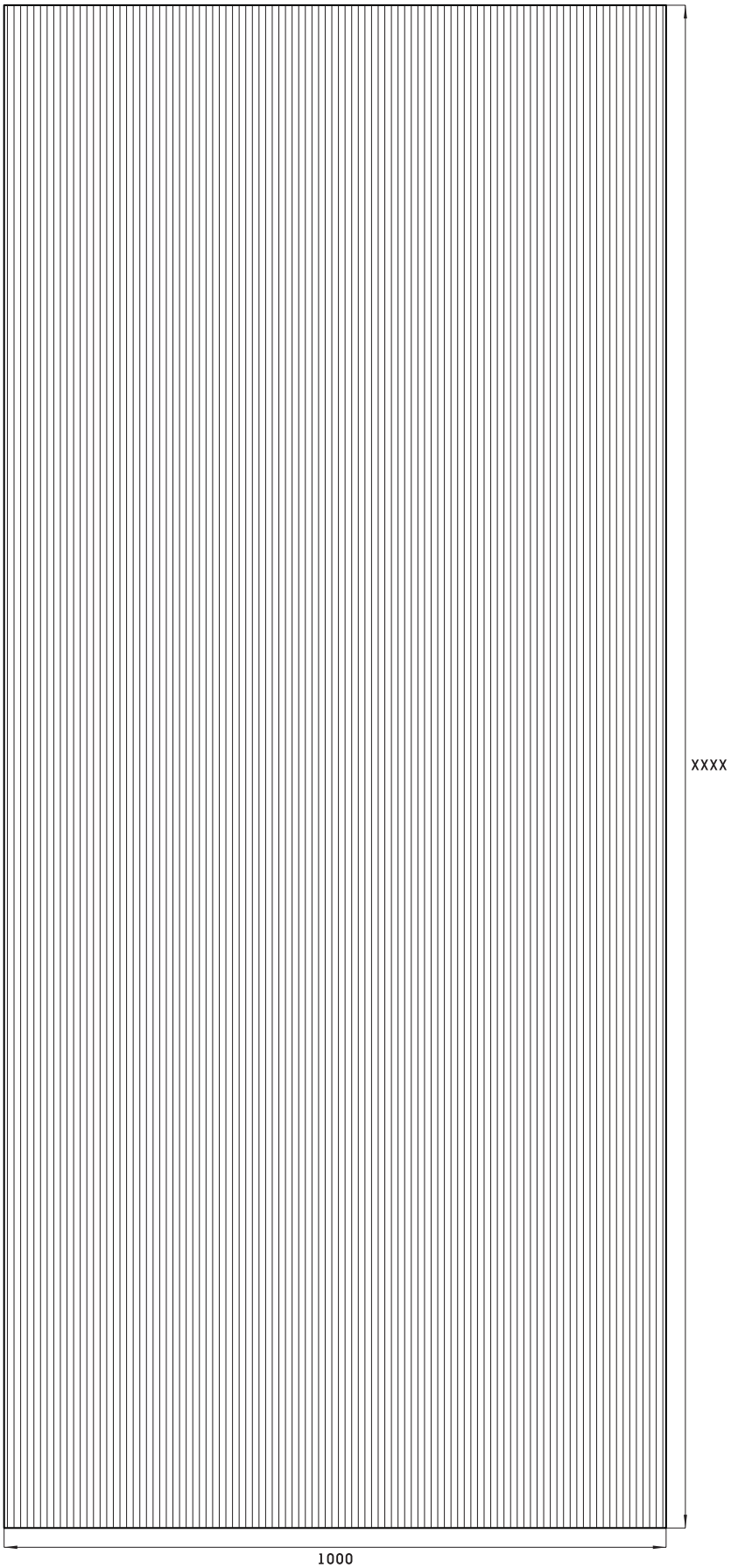

B:HOOK

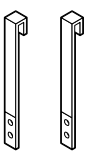

TWIN CARBO SYSTEM WALL

	MM	MM	MM	
A	1000	XXXX	10	X

METAL FITTING	2
SCALE: 1/10	

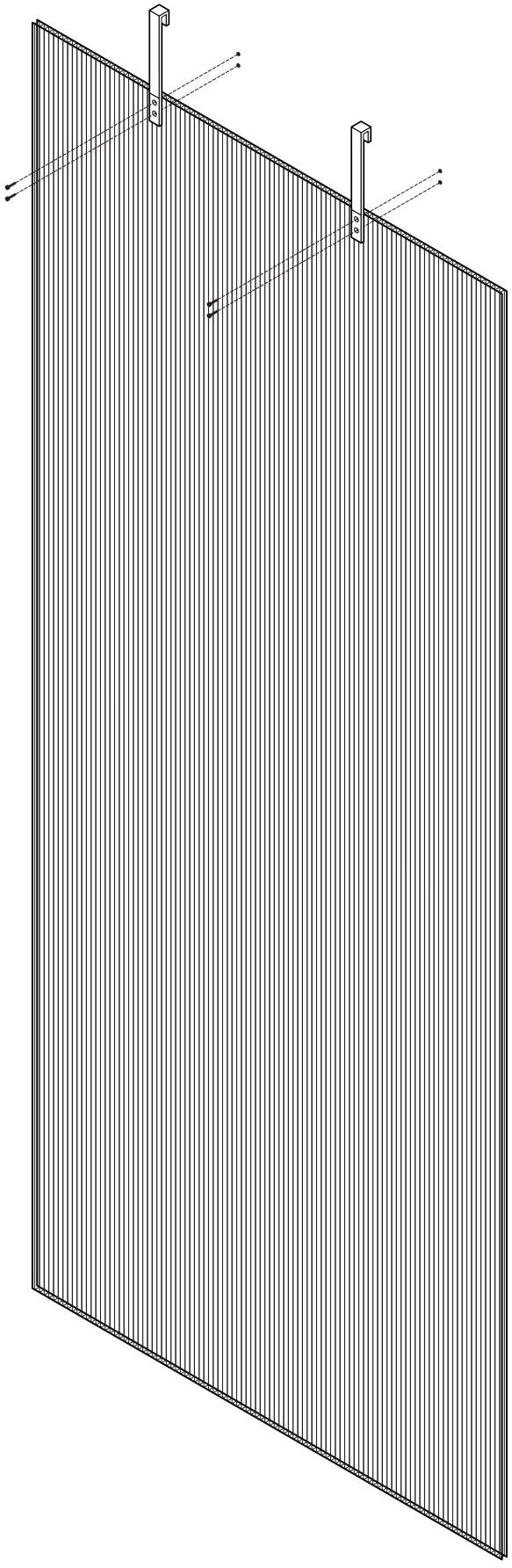

TWIN CARBO SYSTEM WALL

	MM	MM	MM			
A	1000	XXXX	10	X	METAL FITTING	2

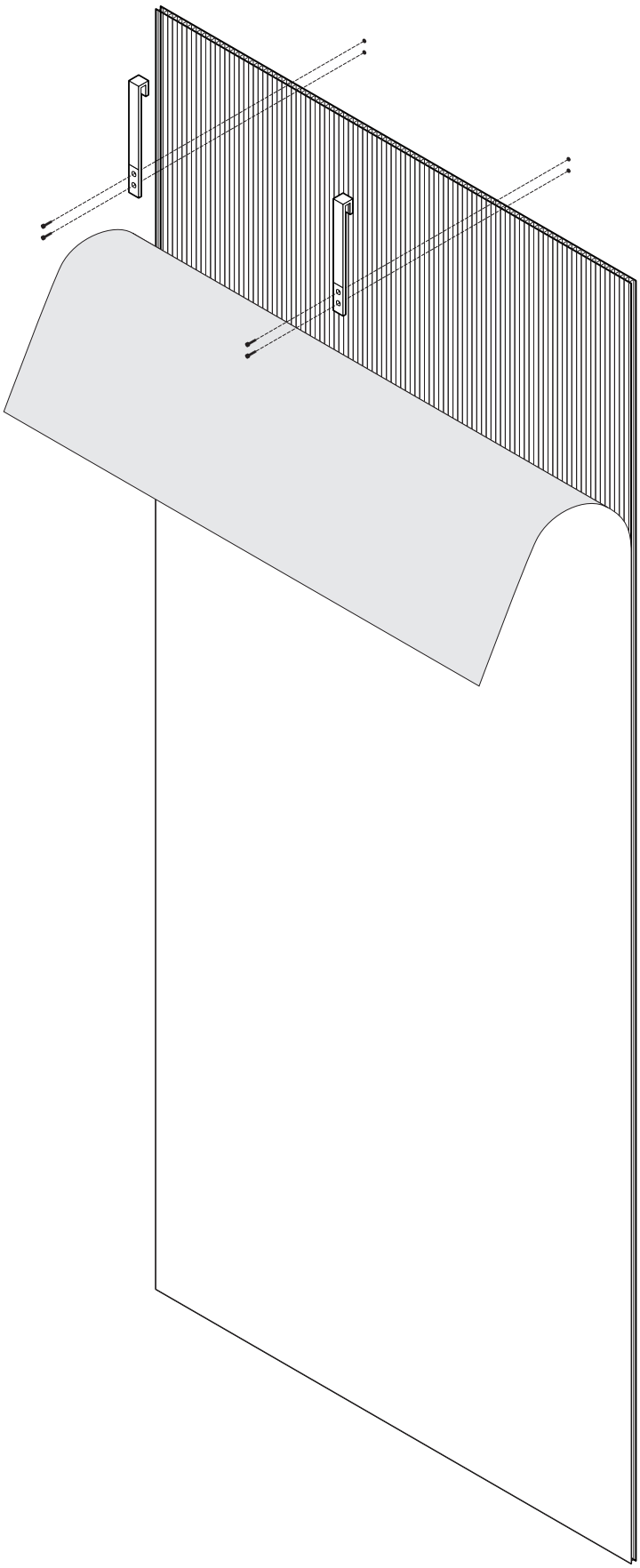

TWIN CARBO SYSTEM WALL

	MM	MM	MM	
A	1000	XXXX	10	X

METAL FITTING	2

CC BY

DESIGNED BY NOSIGNER
2013

MIRROR

ACRYLIC MIRROR

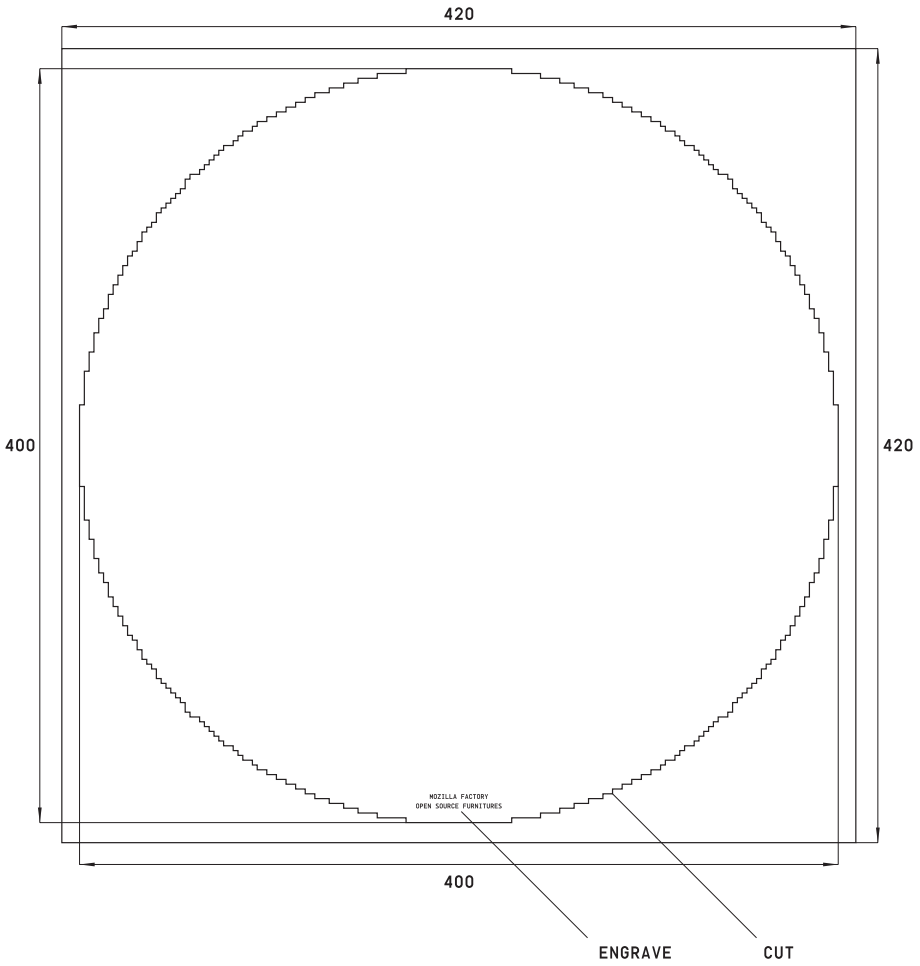

MIRROR

	MM	MM	MM	
ACRYLIC MIRROR	420	420	1	1

SCALE: 1/4

CC BY

MOZILLA FACTORY
OPEN SOURCE FURNITURES

DESIGNED BY NOSIGNER
2013

PIXELATE SIGN

PHONE
PLUG
TOILET
LAN
MEN
WOMEN
PRIVATE
DO NOT ENTER

PIXELATE SIGN

SCALE: 1/2

01 02 03 04 05 06
07 08 09 10 11 12
13 14 15 16 17 18
19 20 21 22 23 24
25 26 27 28 29 30

PIXELATE SIGN

SCALE: 1/2

CC BY

MOZILLA FACTORY
OPEN SOURCE FURNITURES

DESIGNED BY NOSIGNER
2013

MOZILLA MODULE

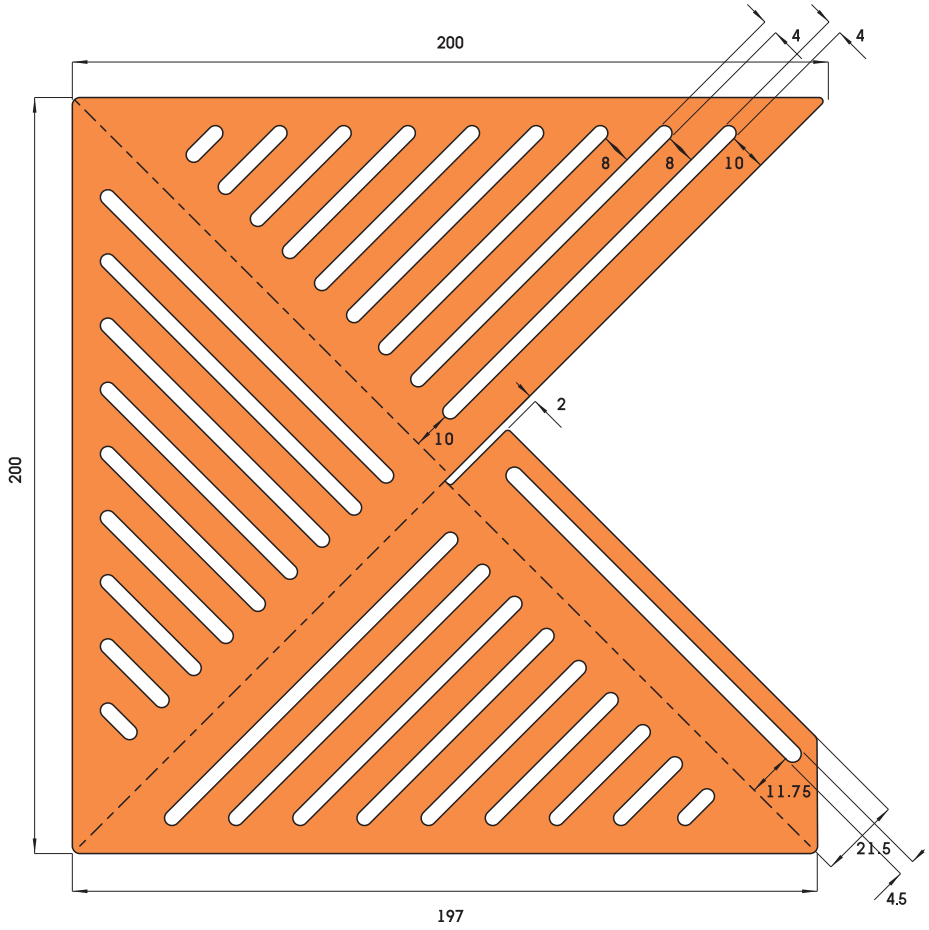

MOZILLA MODULE

SCALE: 1/2

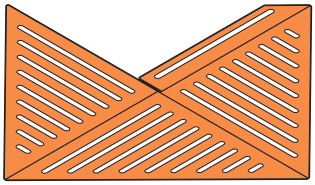

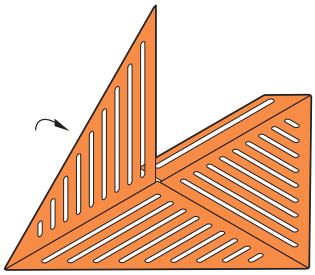

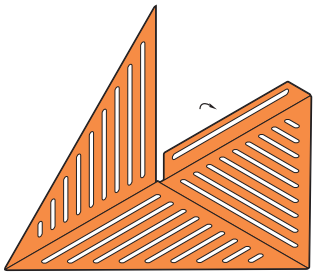

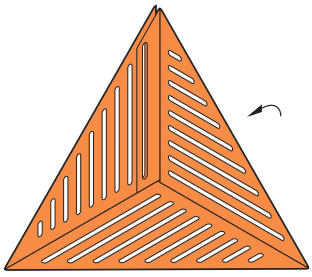

MOZILLA MODULE

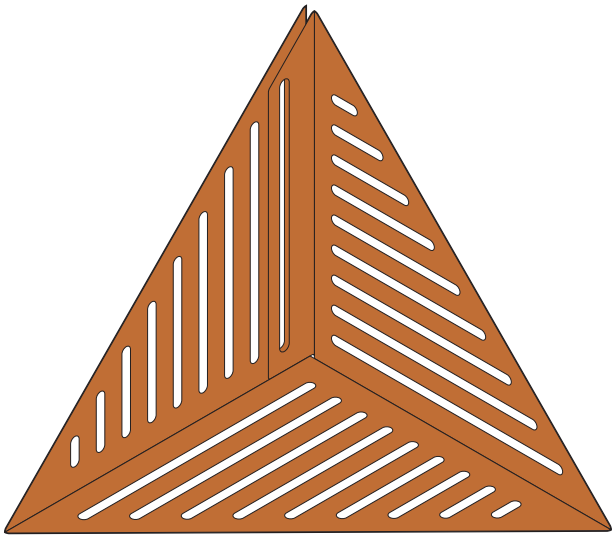

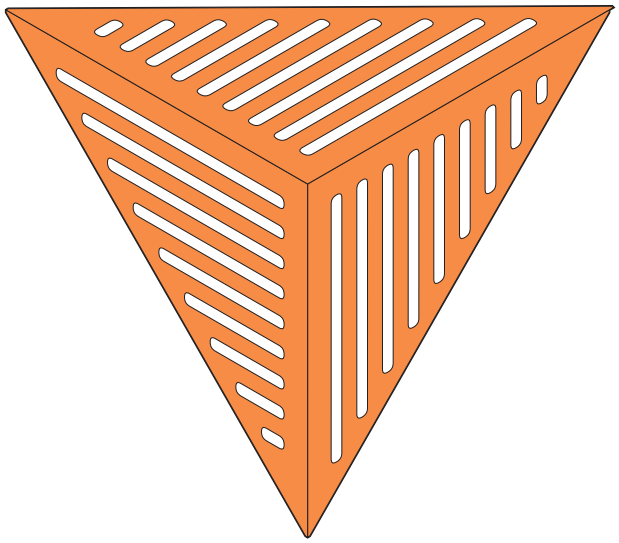

MOZILLA MODULE

CC BY

MOZILLA FACTORY
OPEN SOURCE FURNITURES

DESIGNED BY NOSIGNER
2013

TABLE

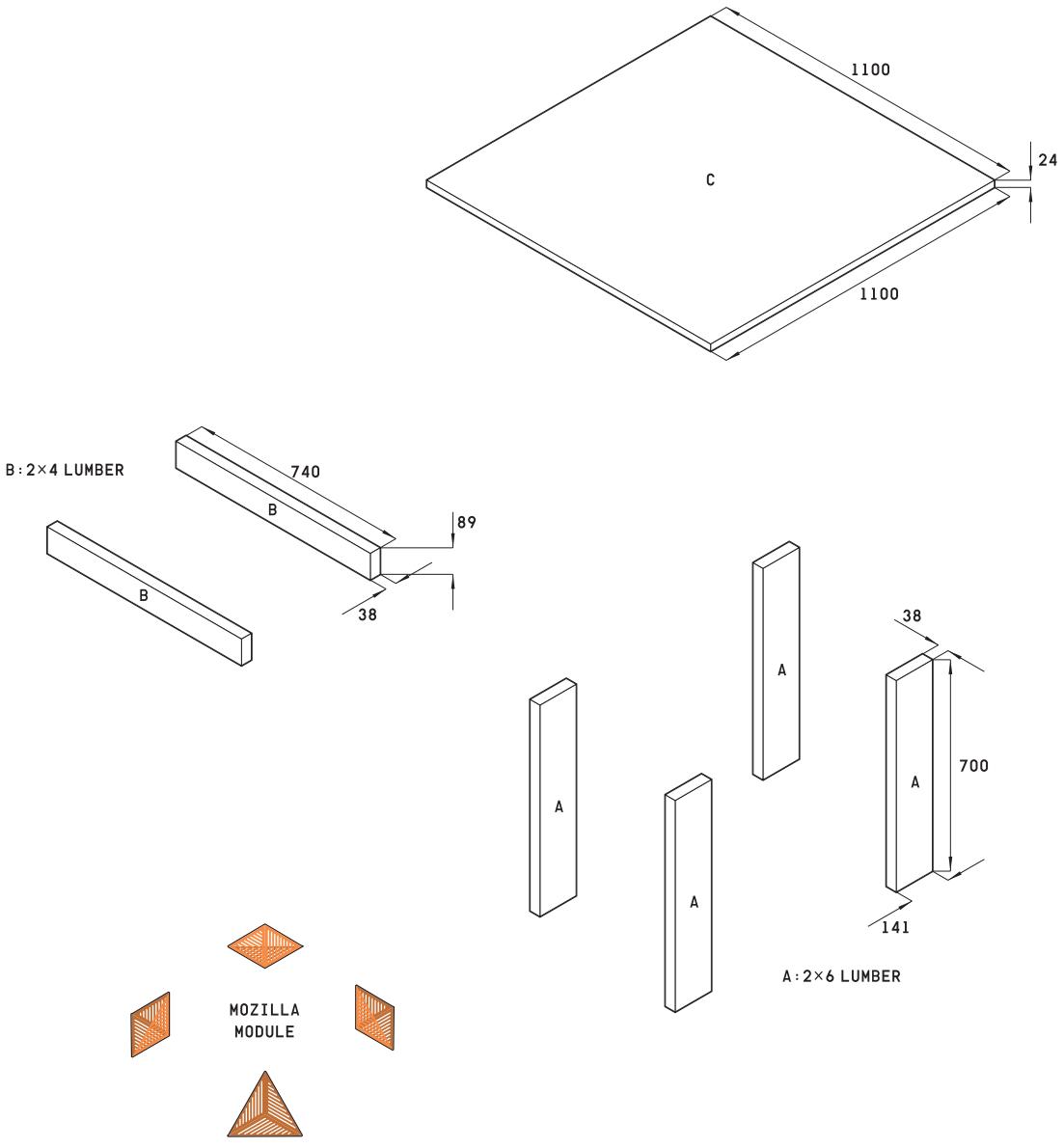

TABLE

	MM	MM	MM	
A	700	141	38	4
B	740	89	38	2

	MM	MM	MM	
C	1100	1100	24	1
MOZILLA MODULE				4

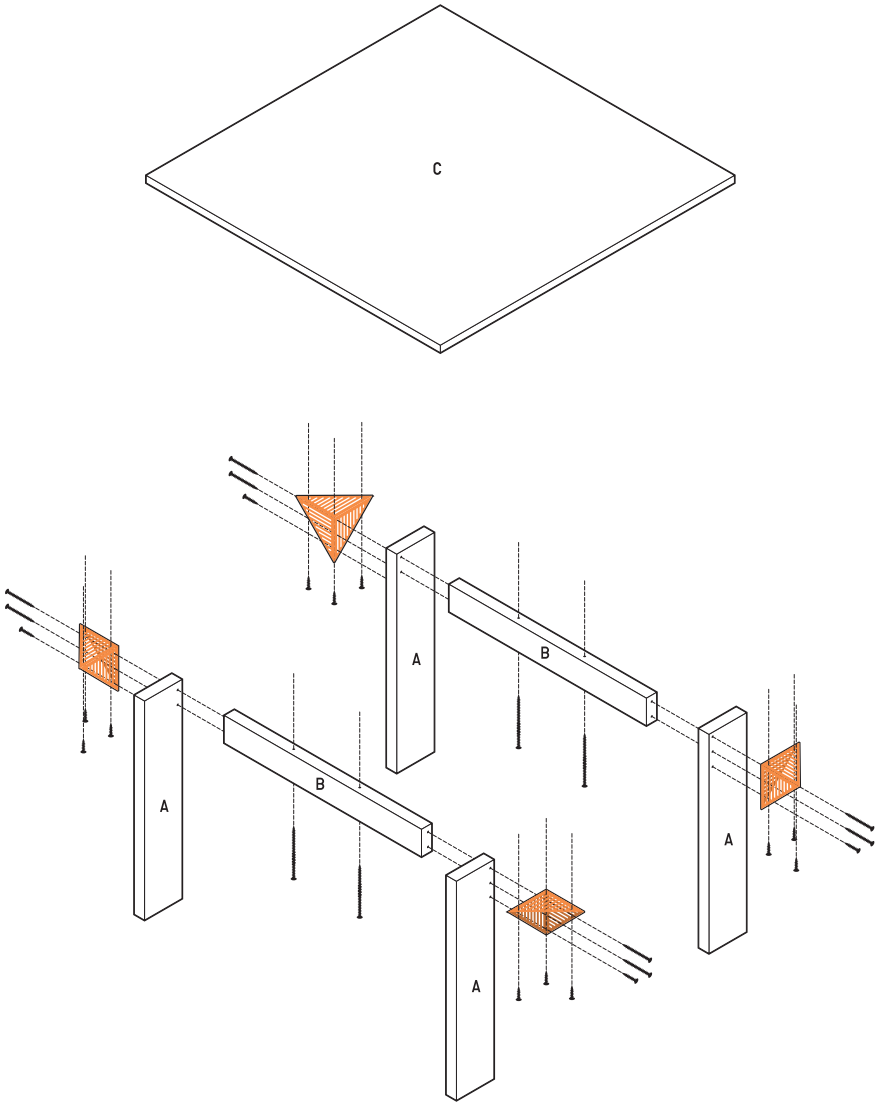

TABLE

	MM	MM	MM	
A	700	141	38	4
B	740	89	38	2

	MM	MM	MM	
C	1100	1100	24	1
MOZILLA MODULE				4

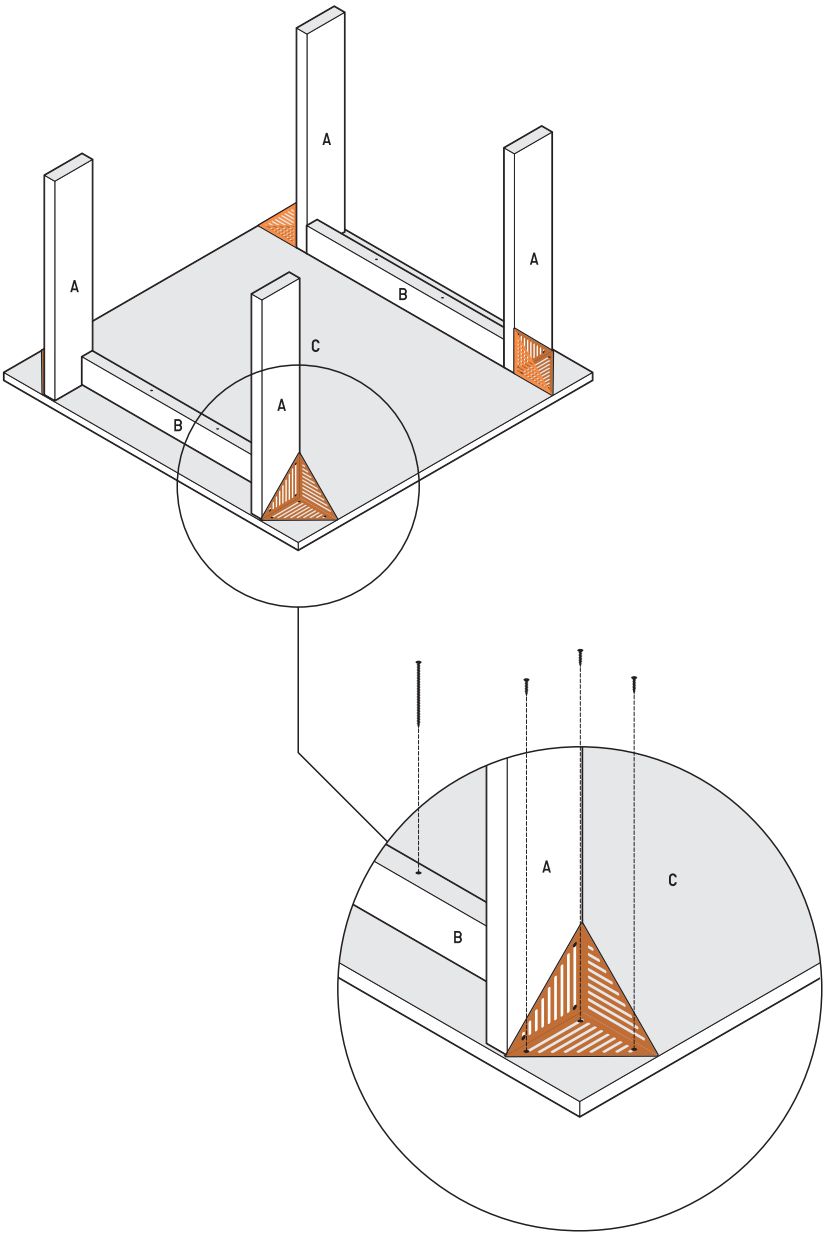

TABLE

	MM	MM	MM	
A	700	141	38	4
B	740	89	38	2

	MM	MM	MM	
C	1100	1100	24	1
MOZILLA MODULE				4

CC BY

MOZILLA FACTORY
OPEN SOURCE FURNITURES

DESIGNED BY NOSIGNER
2013

COUNTER TABLE

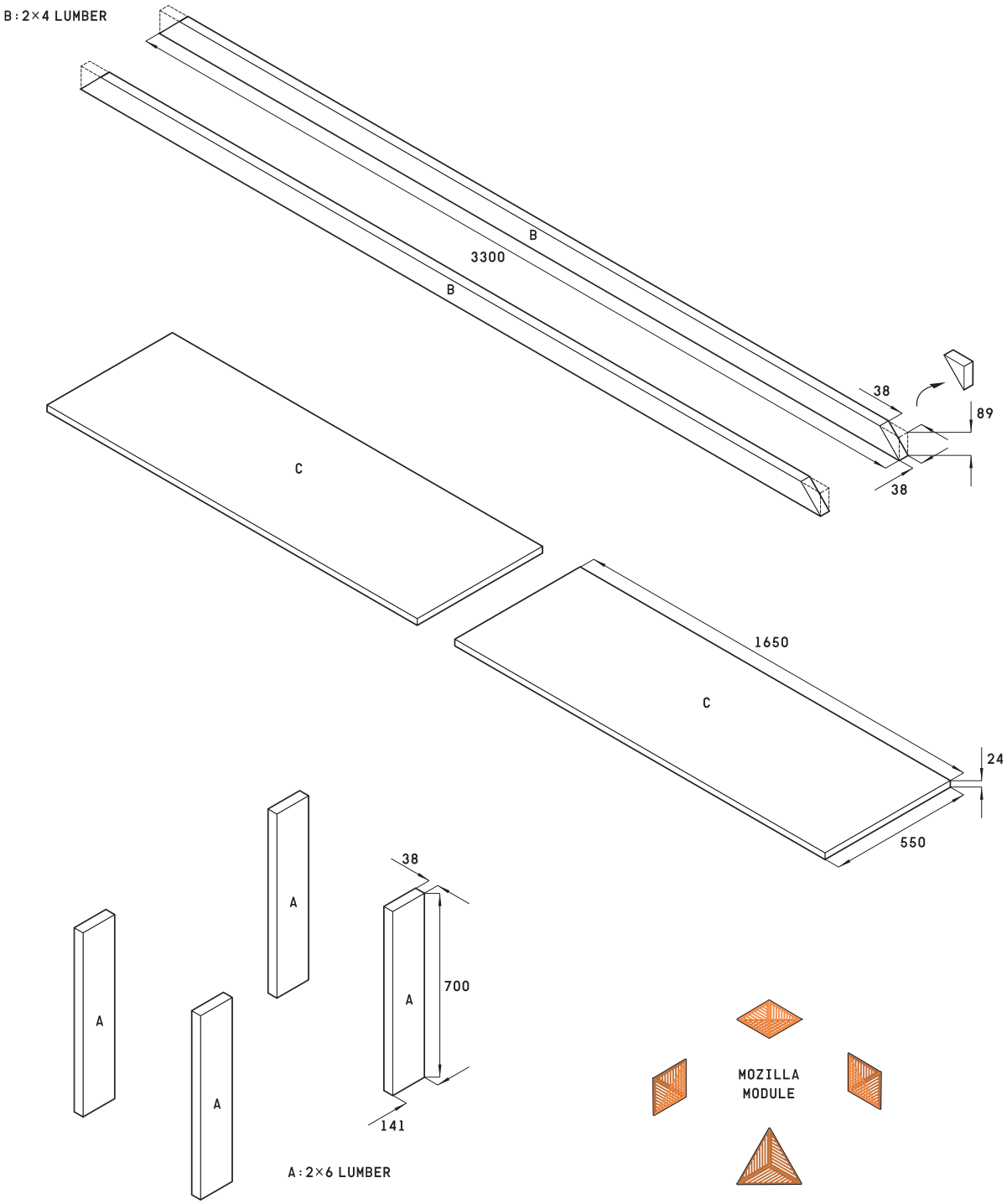

COUNTER TABLE

	MM	MM	MM	
A	700	141	38	4
B	3300	89	38	2

	MM	MM	MM	
C	1650	550	24	2
MOZILLA MODULE				4

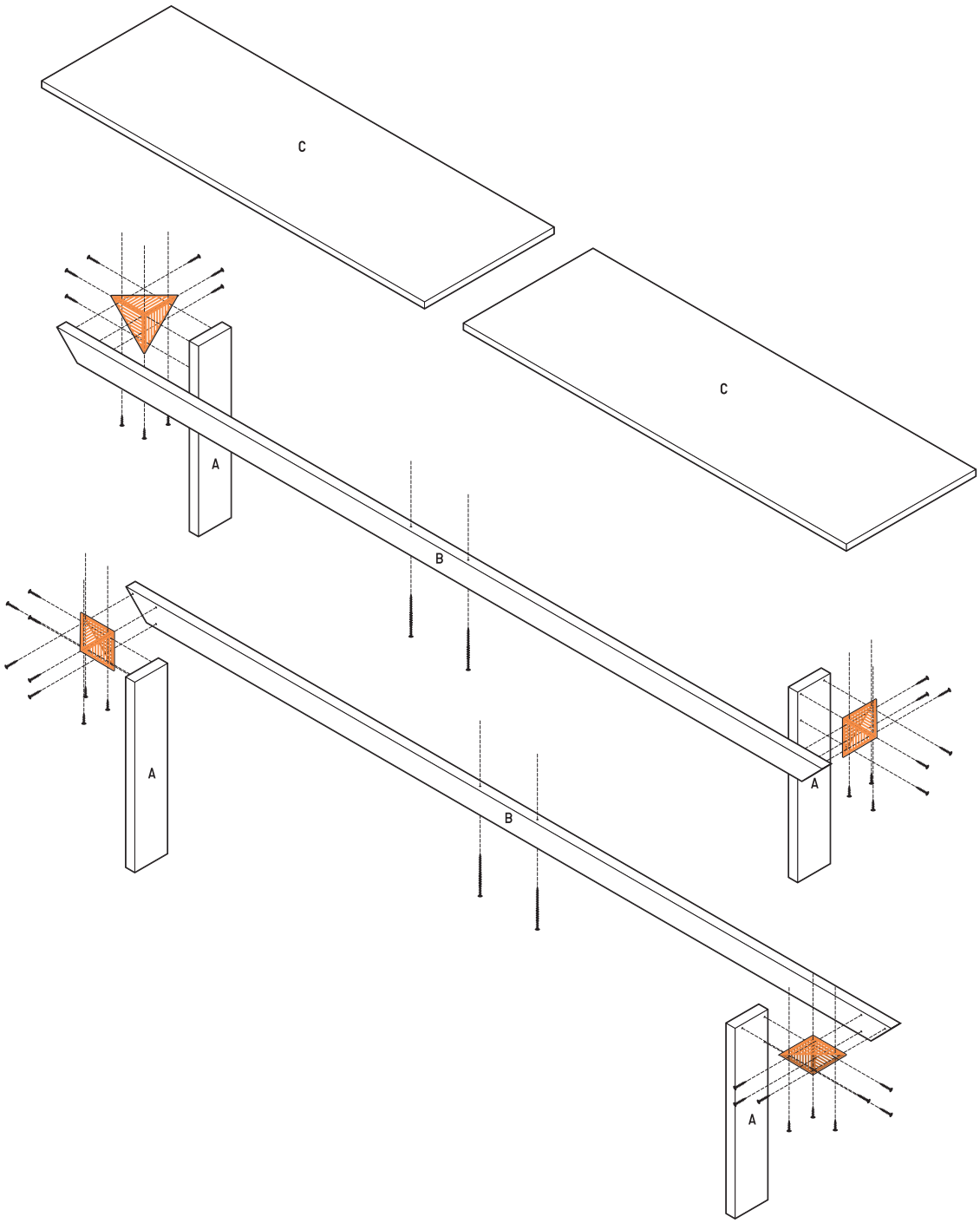

COUNTER TABLE

	MM	MM	MM	
A	700	141	38	4
B	3300	89	38	2

	MM	MM	MM	
C	1650	550	24	2
MOZILLA MODULE				4

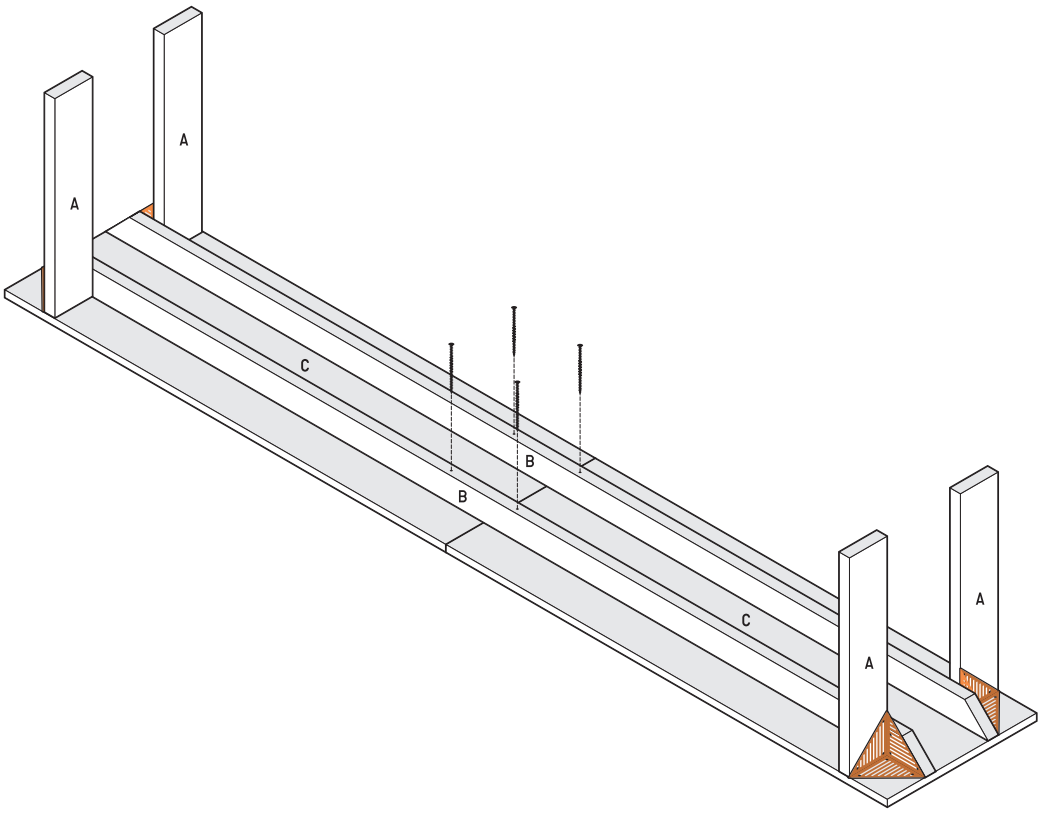

COUNTER TABLE

	MM	MM	MM	
A	700	141	38	4
B	3300	89	38	2

	MM	MM	MM	
C	1650	550	24	2
MOZILLA MODULE				4

CC BY

MOZILLA FACTORY
OPEN SOURCE FURNITURES

DESIGNED BY NOSIGNER
2013

CONFERENCE TABLE

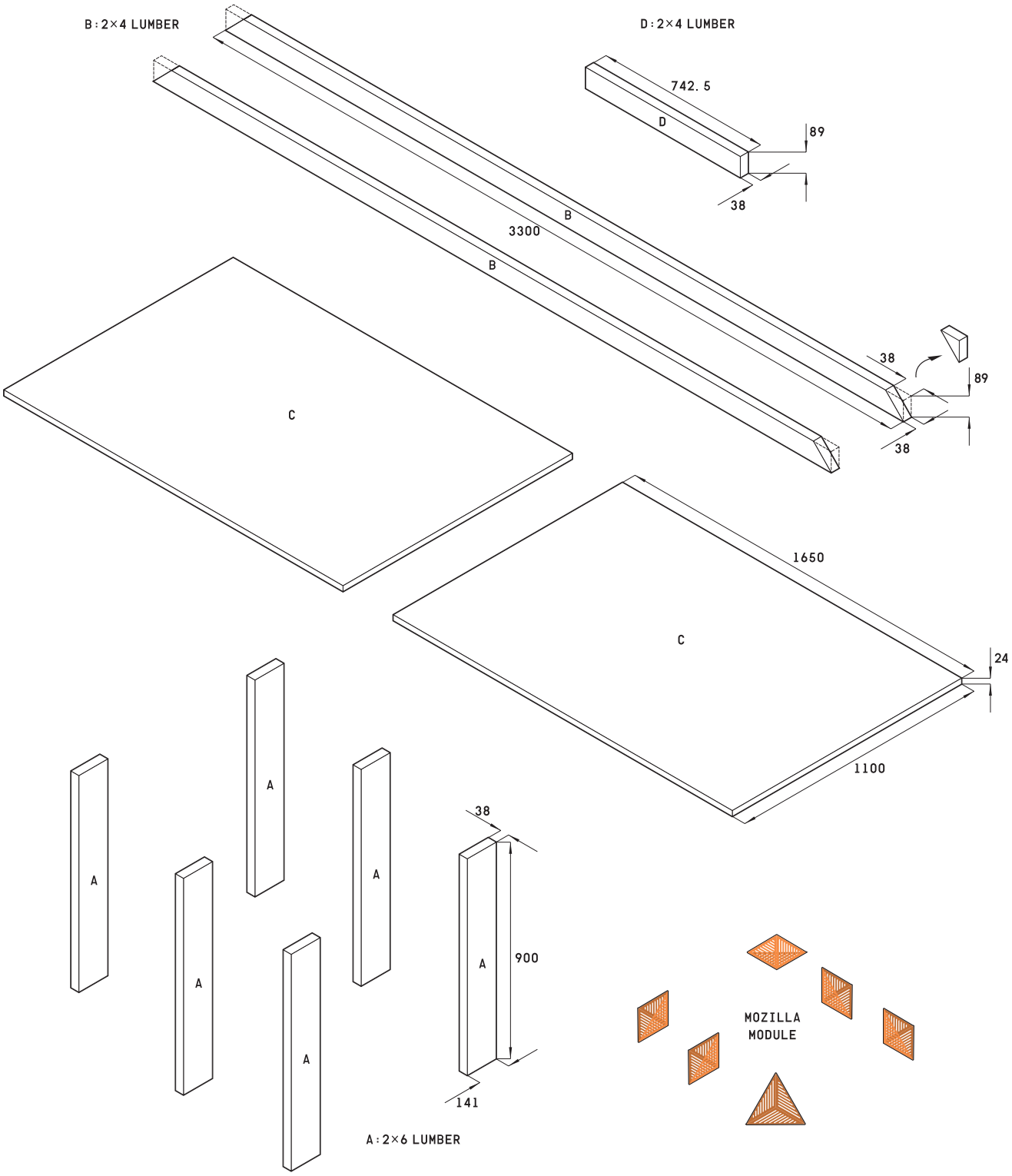

CONFERENCE TABLE

	MM	MM	MM	
A	900	141	38	6
B	3300	89	38	2
C	1650	550	24	2

	MM	MM	MM	
D	742.5	89	38	1
MOZILLA MODULE				6

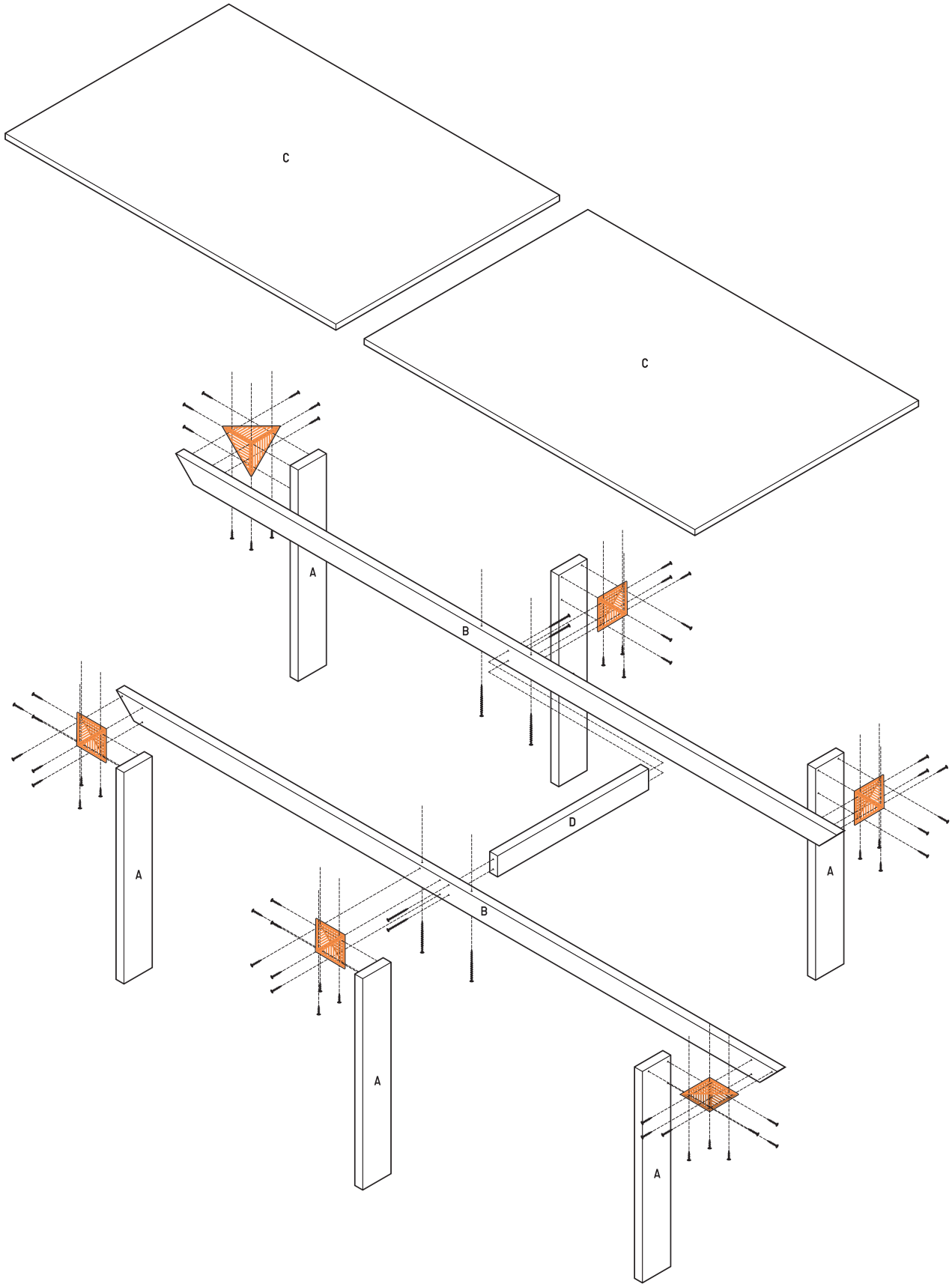

CONFERENCE TABLE

	MM	MM	MM	
A	900	141	38	6
B	3300	89	38	2
C	1650	550	24	2

	MM	MM	MM	
D	742.5	89	38	1
MOZILLA MODULE				6

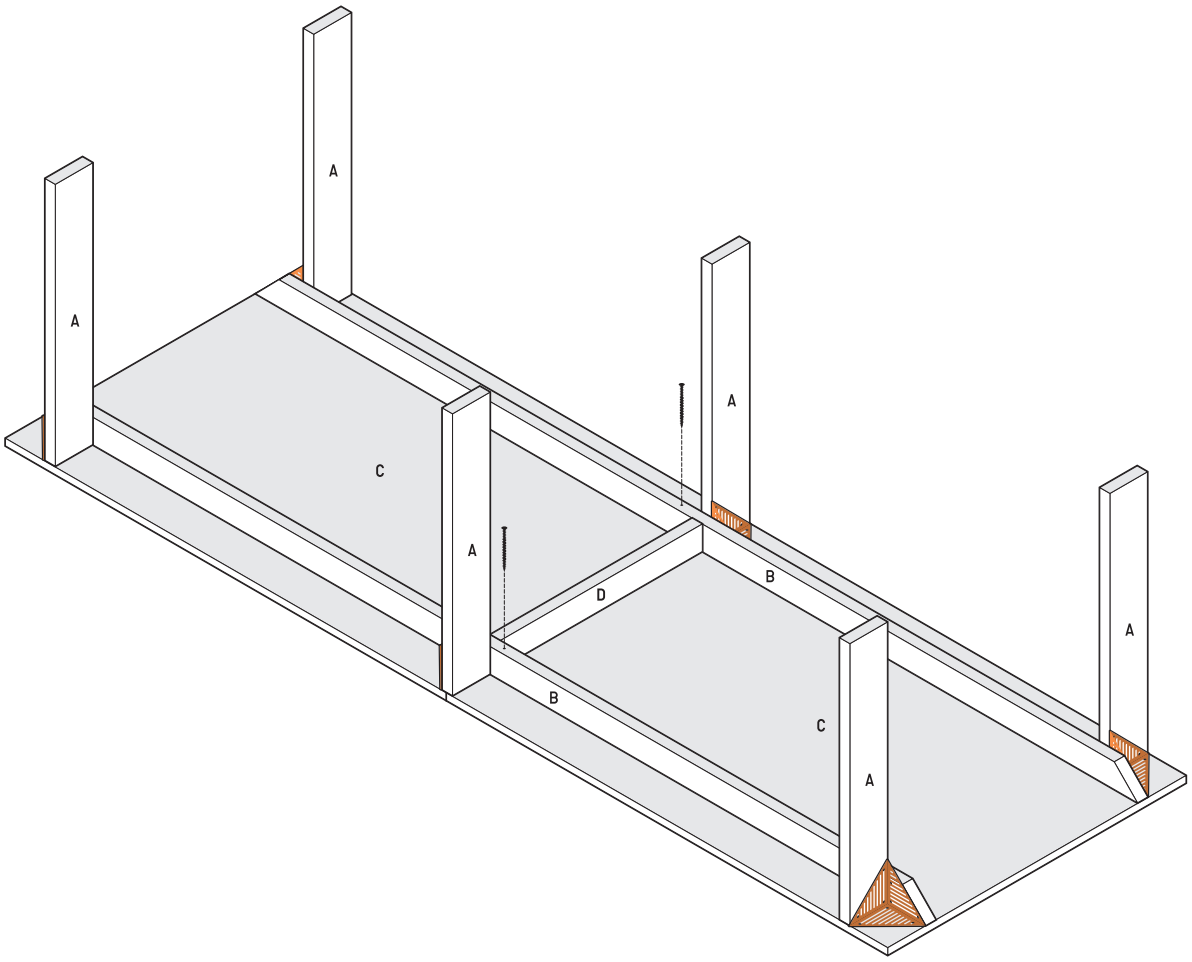

CONFERENCE TABLE

	MM	MM	MM	
A	900	141	38	6
B	3300	89	38	2
C	1650	550	24	2

	MM	MM	MM	
D	742.5	89	38	1
MOZILLA MODULE				6

CC BY

MOZILLA FACTORY
OPEN SOURCE FURNITURES

DESIGNED BY NOSIGNER
2013

WALL SHELF

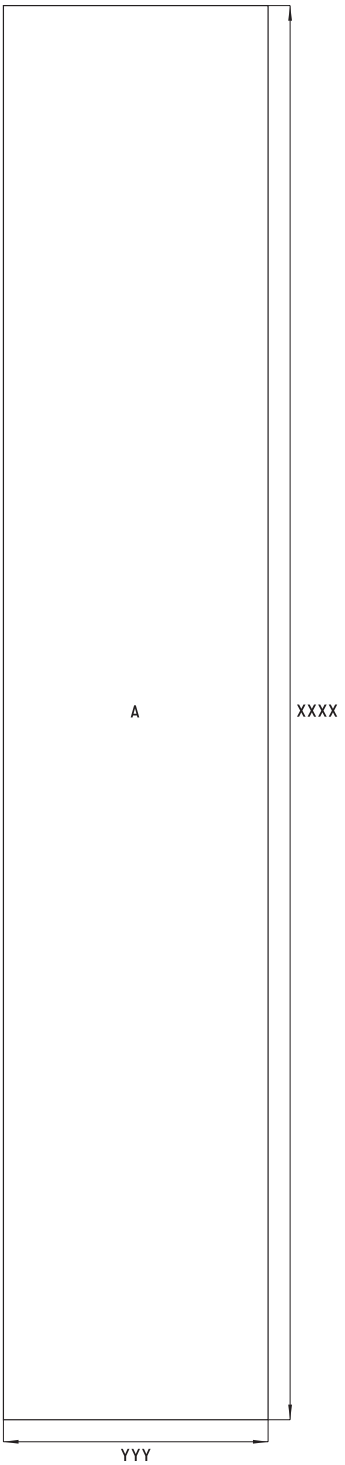

MOZILLA MODULE

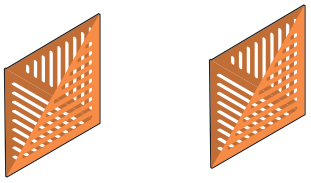

WALL SHELF

	MM	MM	MM	
A	YYY	XXXX	12	1

MOZILLA MODULE 2

SCALE: 1/10

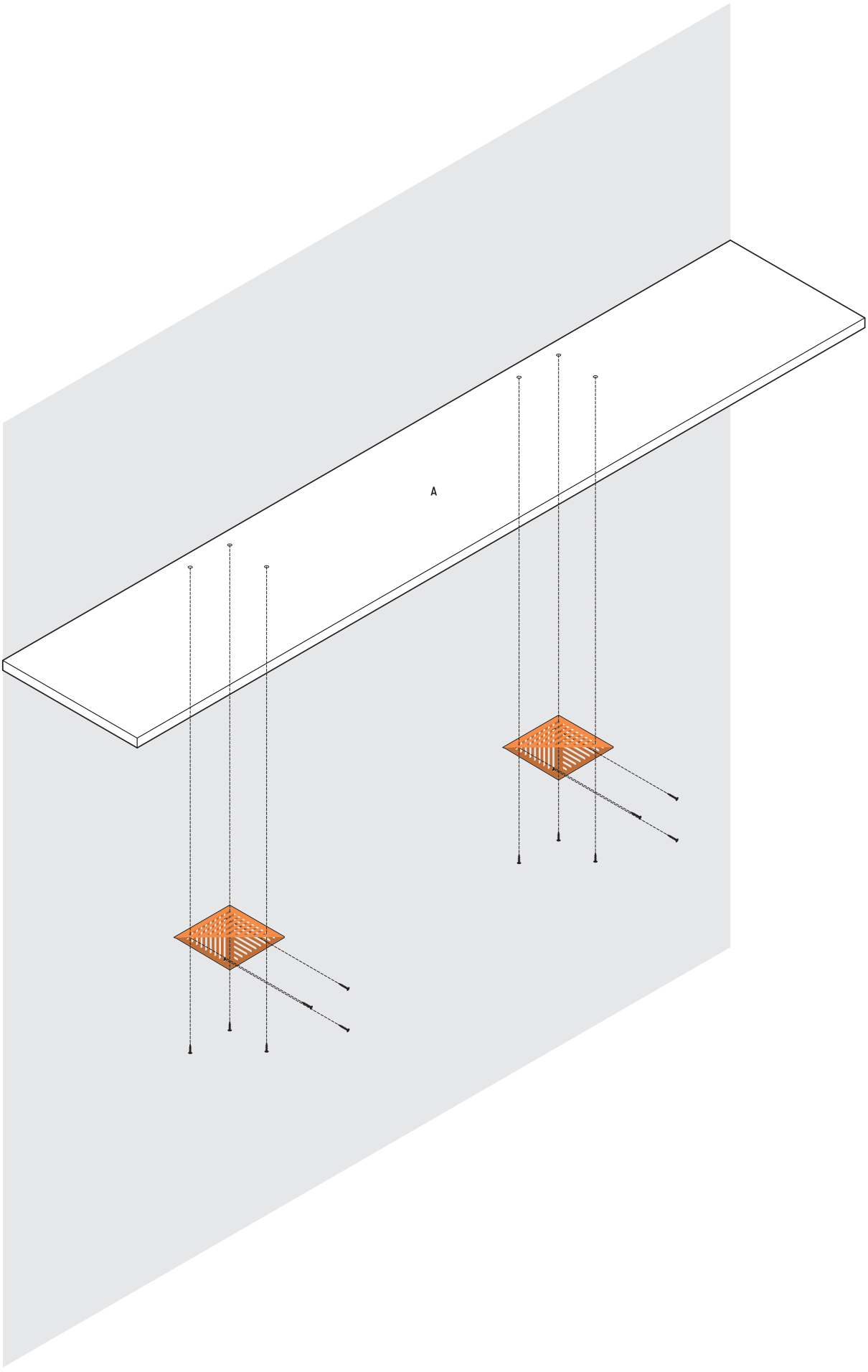

WALL SHELF

	MM	MM	MM	
A	YYY	XXXX	12	1

MOZILLA MODULE 2

SCALE: 1/10

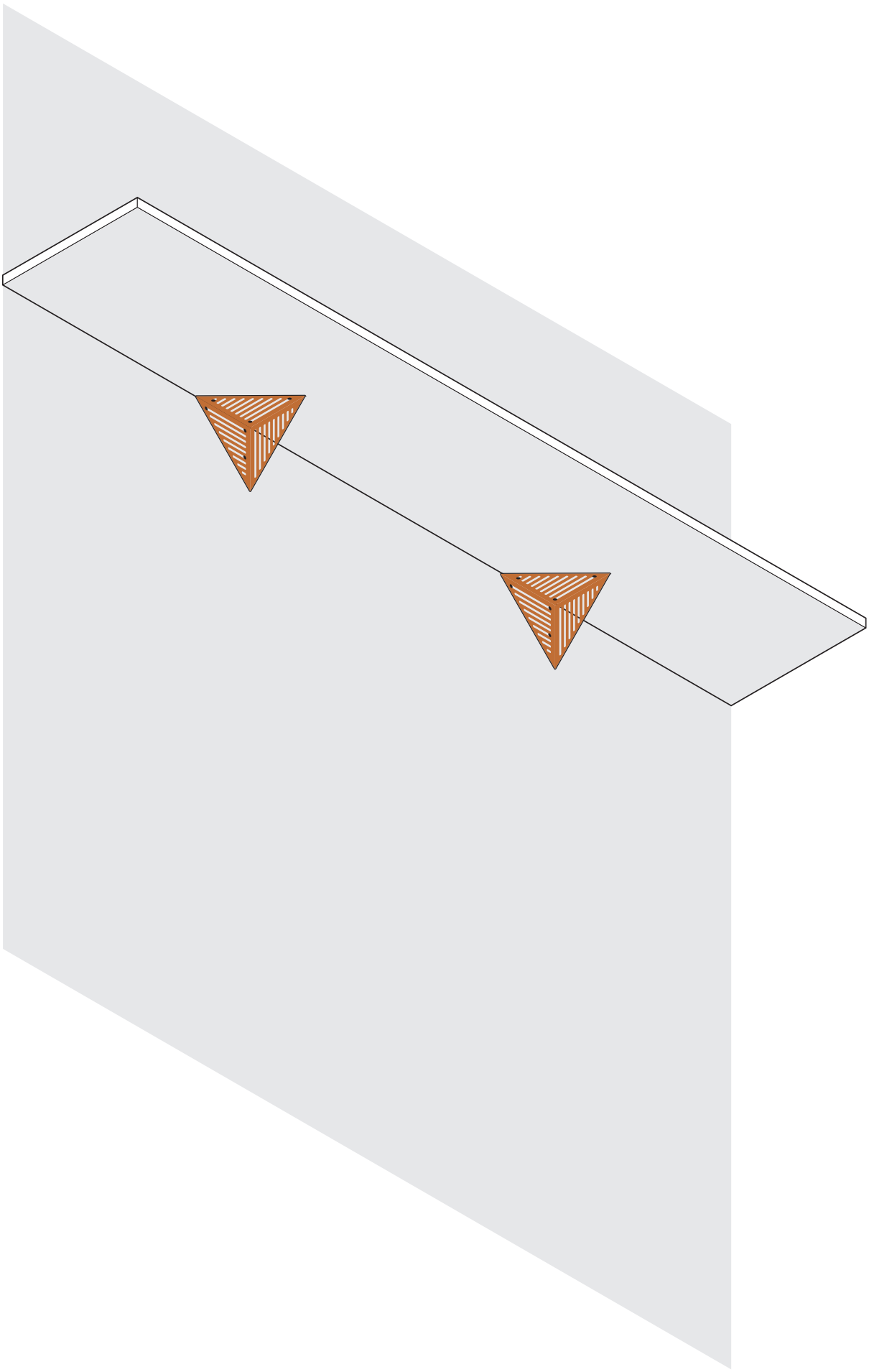

WALL SHELF

	MM	MM	MM	
A	YYY	XXXX	12	1

MOZILLA MODULE 2

SCALE: 1/10

CC BY

LIGHT

A:MULTI-WALL POLYCARBONATE SHEET

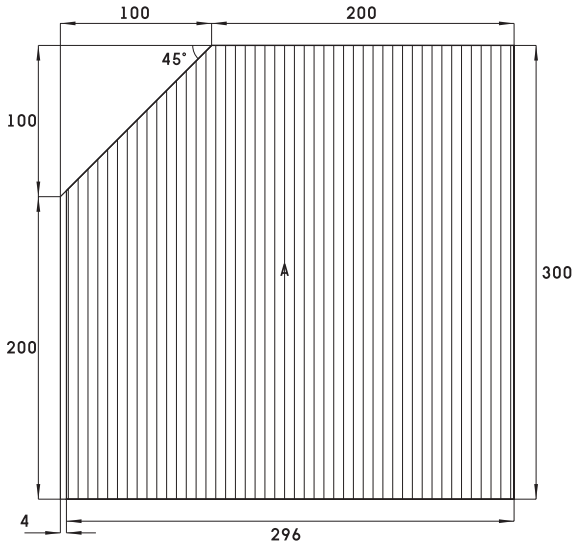

BOLT 4.5MM, NUT
Ø4

BULB & SOCKET

B:MULTI-WALL POLYCARBONATE SHEET

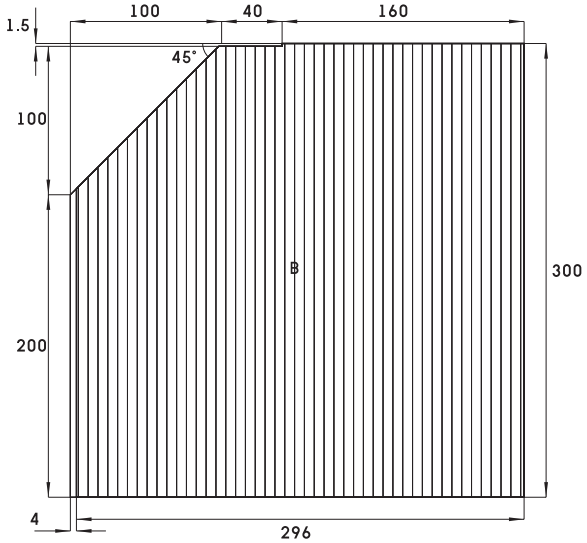

C:MULTI-WALL POLYCARBONATE SHEET

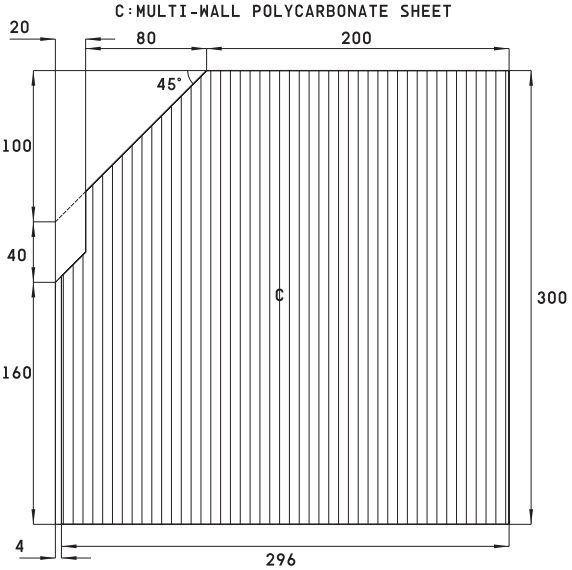

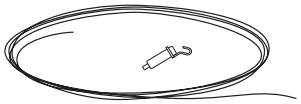

STEEL WIRE & HANGING HOOK
Ø1 100MM

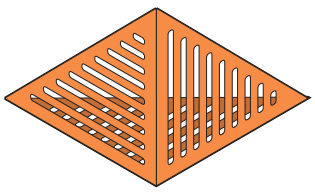

MOZILLA
MODULE

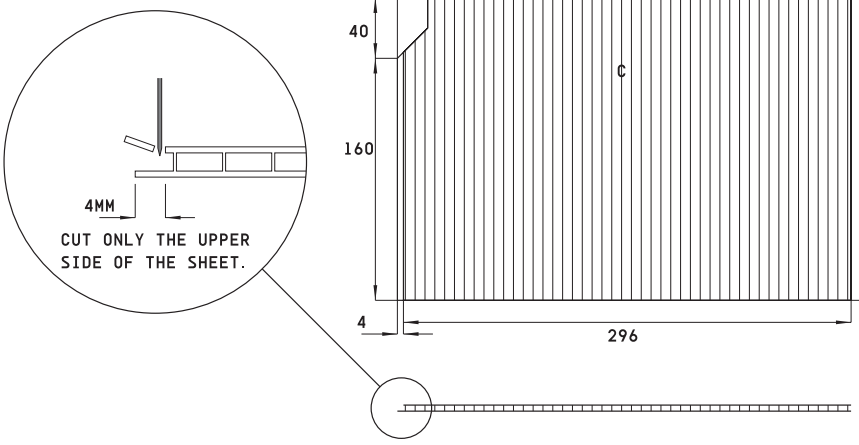

LIGHT

	MM	MM	MM	
A	300	300	4	1
B	300	300	4	1

	MM	MM	MM	
C	300	300	4	1
MOZILLA MODULE				1
SCALE: 1/5				

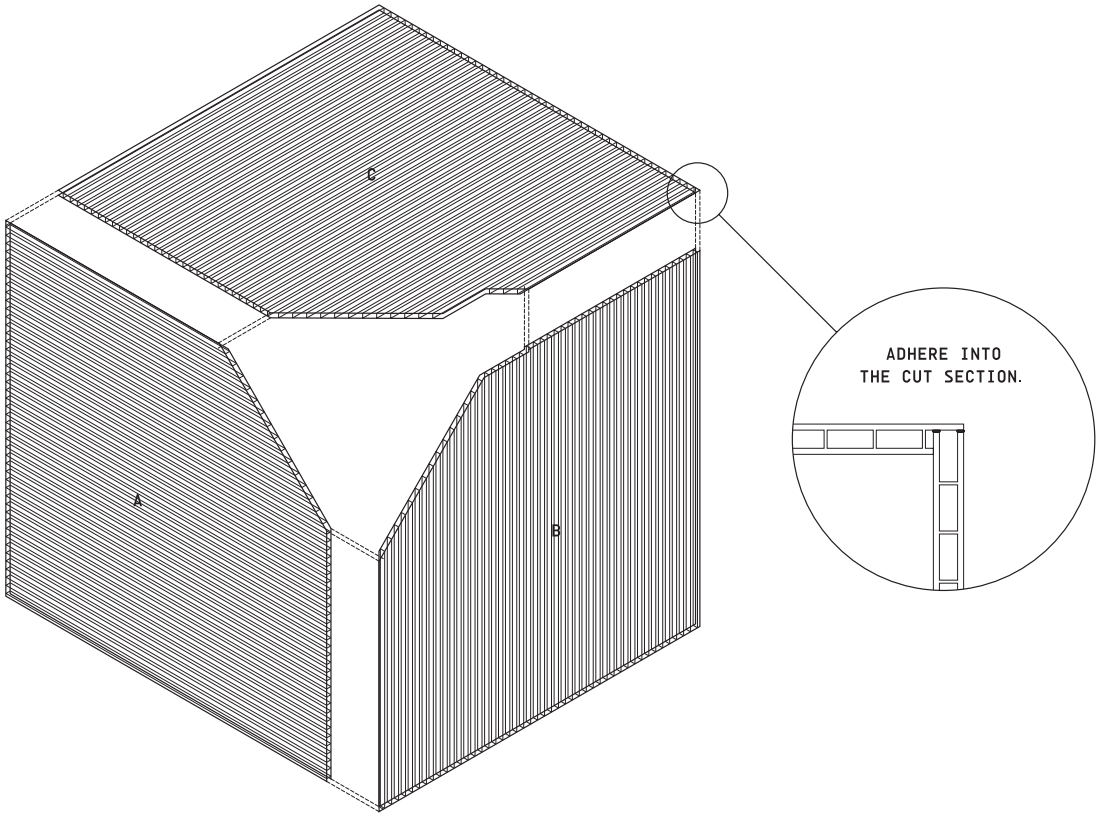

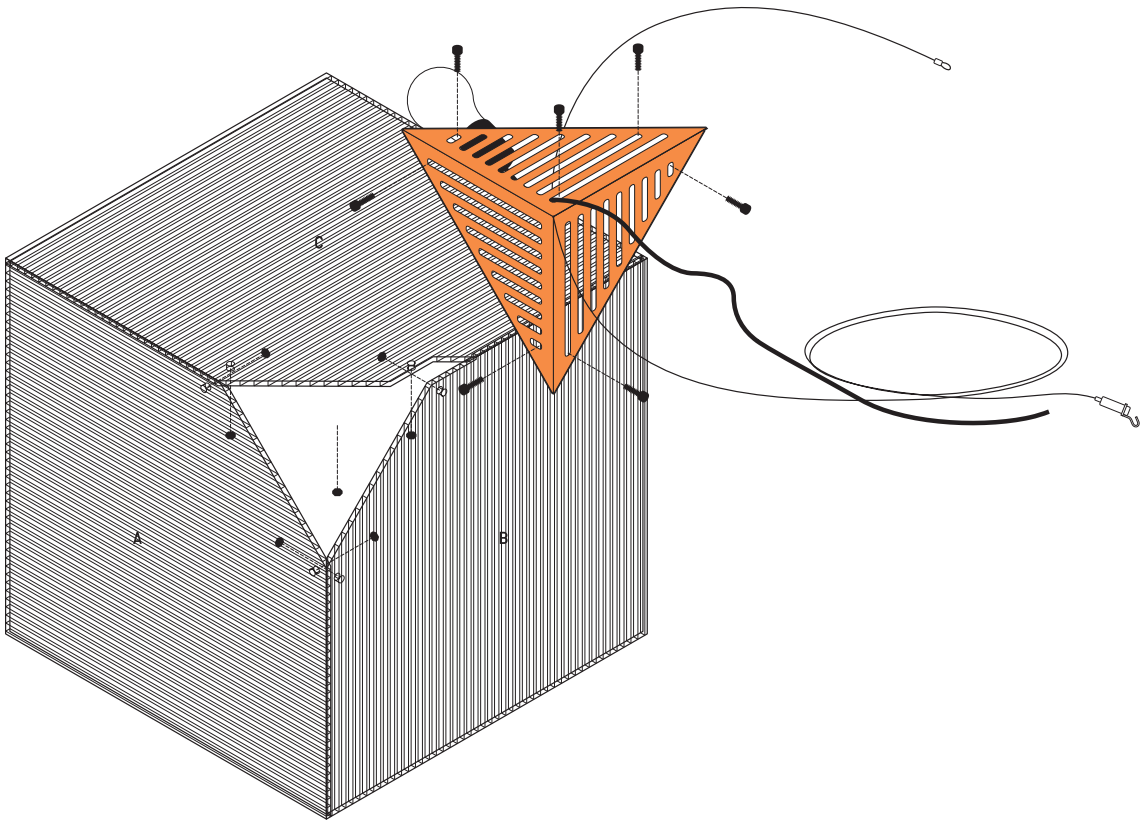

LIGHT

	MM	MM	MM	
A	300	300	4	1
B	300	300	4	1

	MM	MM	MM	
C	300	300	4	1
MOZILLA MODULE				1

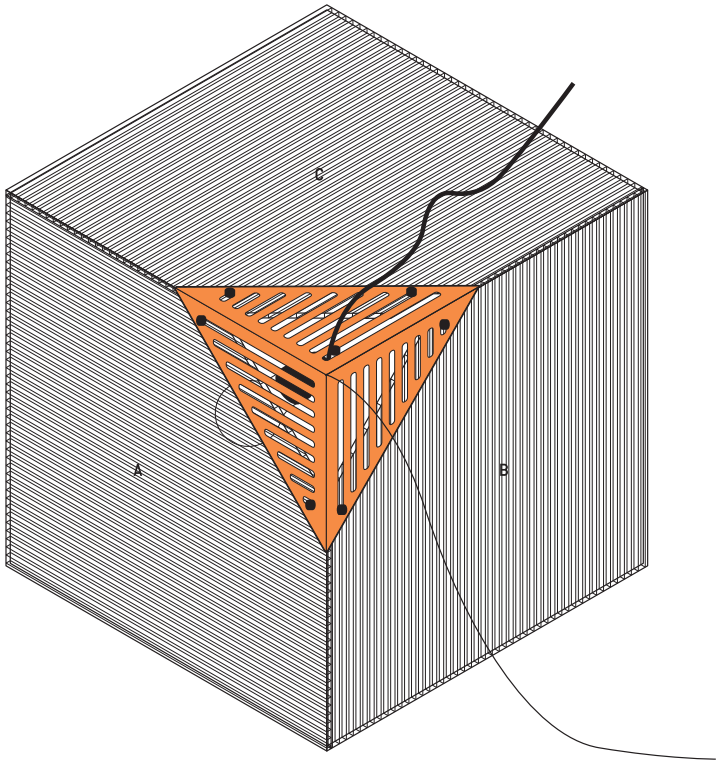

LIGHT

	MM	MM	MM	
A	300	300	4	1
B	300	300	4	1

	MM	MM	MM	
C	300	300	4	1
MOZILLA MODULE				1